Rotary cylinders - Series ARP

Product code: ARP-005-1DA-F0507-AEX

Datasheet creation date: 07/03/2025 17:51

Check the most updated document online *click here*

TECHNICAL DATA

Series	ARP
Size	005 = torque force 50 Nm
Operation	1D = single-acting, minimum pressure of 6 bar
Rotation angle (°)	A = 90°
Interface for flange (iso 5211)	F0507
Materials	A = standard anodized
Atex	EX

Products designed for industrial applications. General terms and conditions for sale are available on www.camozzi.com.
This document contains a brief description of the products offered by Camozzi Automation at time of publication.
For more complete and up to date information about the Camozzi Automation product range, please refer to our online catalogue at https://shop.camozzi.com

Rotary cylinders - Series ARP

Product code: ARP-005-1DA-F0507-AEX

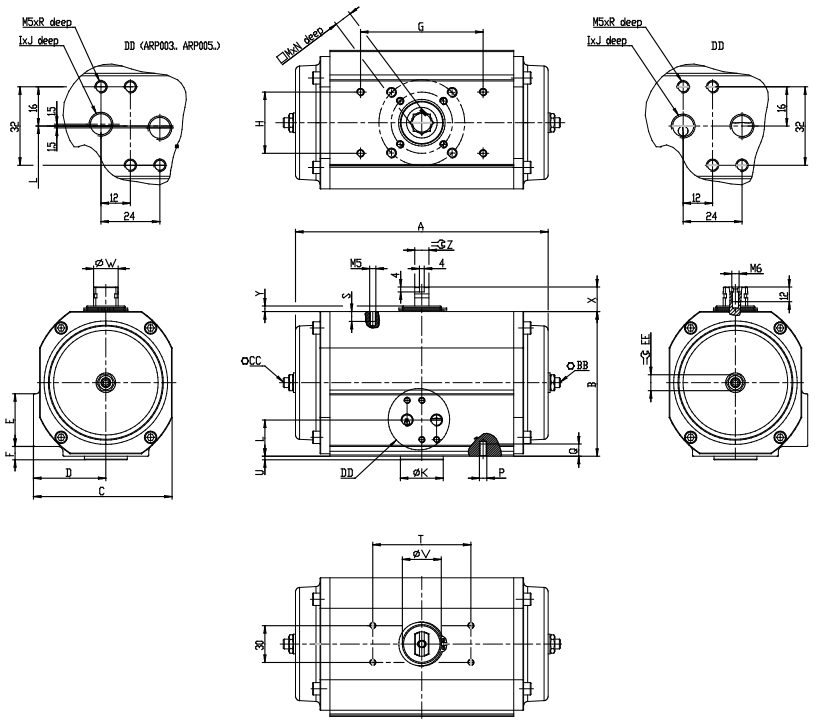

DIMENSIONS

ISO	F05-F07
A (mm)	186.5
B (mm)	87.0
C (mm)	90.5
D (mm)	49.0
E (mm)	49.0
F (mm)	22
G (mm)	0
H (mm)	0
I	G1/8
J (mm)	10
ØK (mm)	35
L (mm)	48.0
M (mm)	14
N (mm)	15
P (mm)	-
Q (mm)	0
R (mm)	8
S (mm)	8
T (mm)	80
U (mm)	3.0
ØV (mm)	32.0
ØW (mm)	20

X (mm)	20
Y (mm)	4.5
Z (mm)	11.5
BB (mm)	0
CC (mm)	4
EE (mm)	13

Products designed for industrial applications. General terms and conditions for sale are available on www.camozzi.com.
This document contains a brief description of the products offered by Camozzi Automation at time of publication.
For more complete and up to date information about the Camozzi Automation product range, please refer to our online catalogue at https://shop.camozzi.com